Bangladesh University of Engineering and Technology
Department of Electrical and Electronic Engineering
Dhaka-1205, Bangladesh

Course No: EEE 316

Project Update

Title: Design and Implementation of a Laboratory Variable DC Power Supply

Group No: 2

Section: A2

Submitted to:	Submitted By:
Rafid Hassan Palash Lecturer, EEE, BUET Mohammad Zawad Adjunct lecturer, EEE, BUET	Mohammad Nurul Wara Rahat - 2106035 Md Shihab Uddin -2106039 Abdullah Atif -2106046 Khondoker Asif Zaman -2106060 Md. Nazmus Sakib -2106061

Project Title: Design and Implementation of a Laboratory Variable DC Power Supply

Objectives:

To design and implement a laboratory variable DC power supply capable of providing a continuously adjustable and regulated DC output voltage for experimental and testing purposes.

Features:

•Continuously variable DC output voltage using a control potentiometer.
•Stable and low-ripple output suitable for sensitive electronic circuits.
•High current handling capability using a power transistor stage.
•Built-in protection against short circuit and overcurrent conditions.
•Simple, reliable, and cost-effective linear power supply design.

Flowchart :

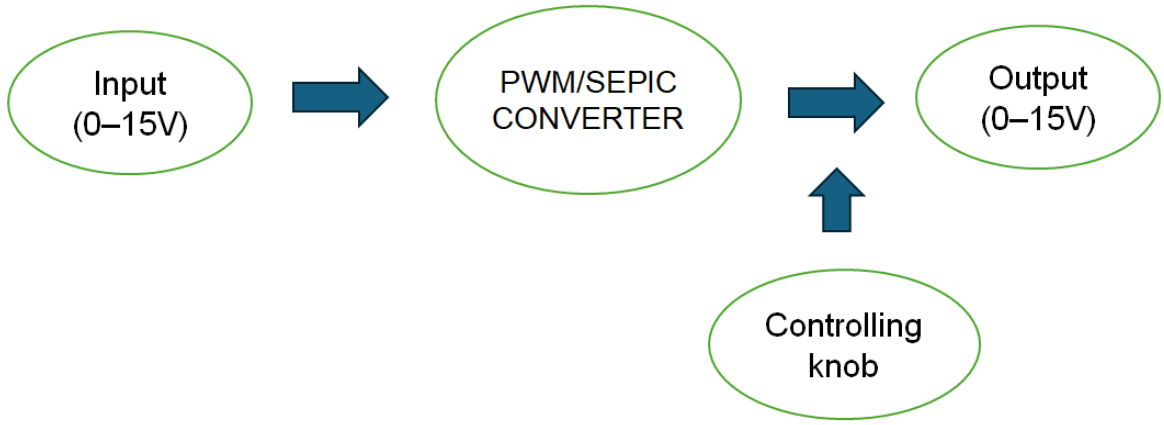

Required Components:

1. MOSFET(IRLZ34N)
2. Schottky Diode(MBR6045)
3. Power Inductors
4. Knob
5. Display
6. Capacitor
7. Resistors
8. PCB / Breadboard
9. Connecting Wires
10. Arduino Uno for PWM

Schematic Diagram of a SEPIC Converter:

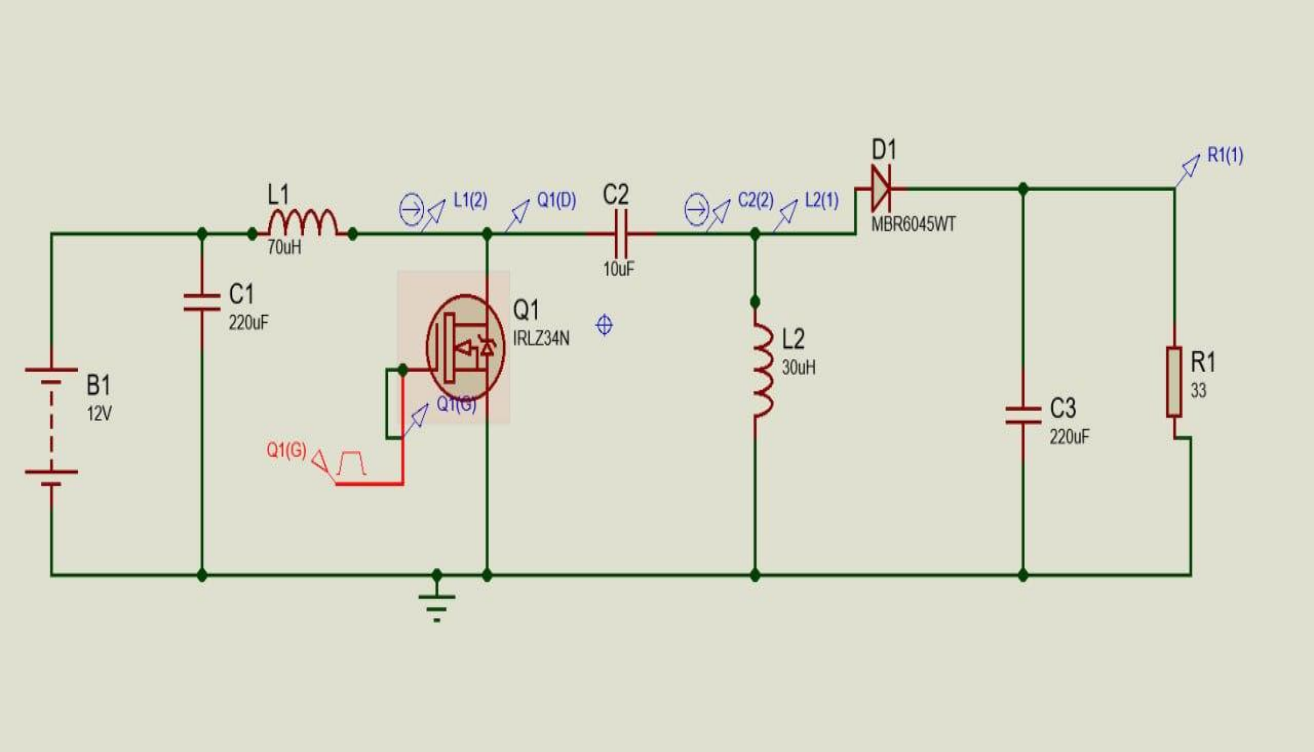

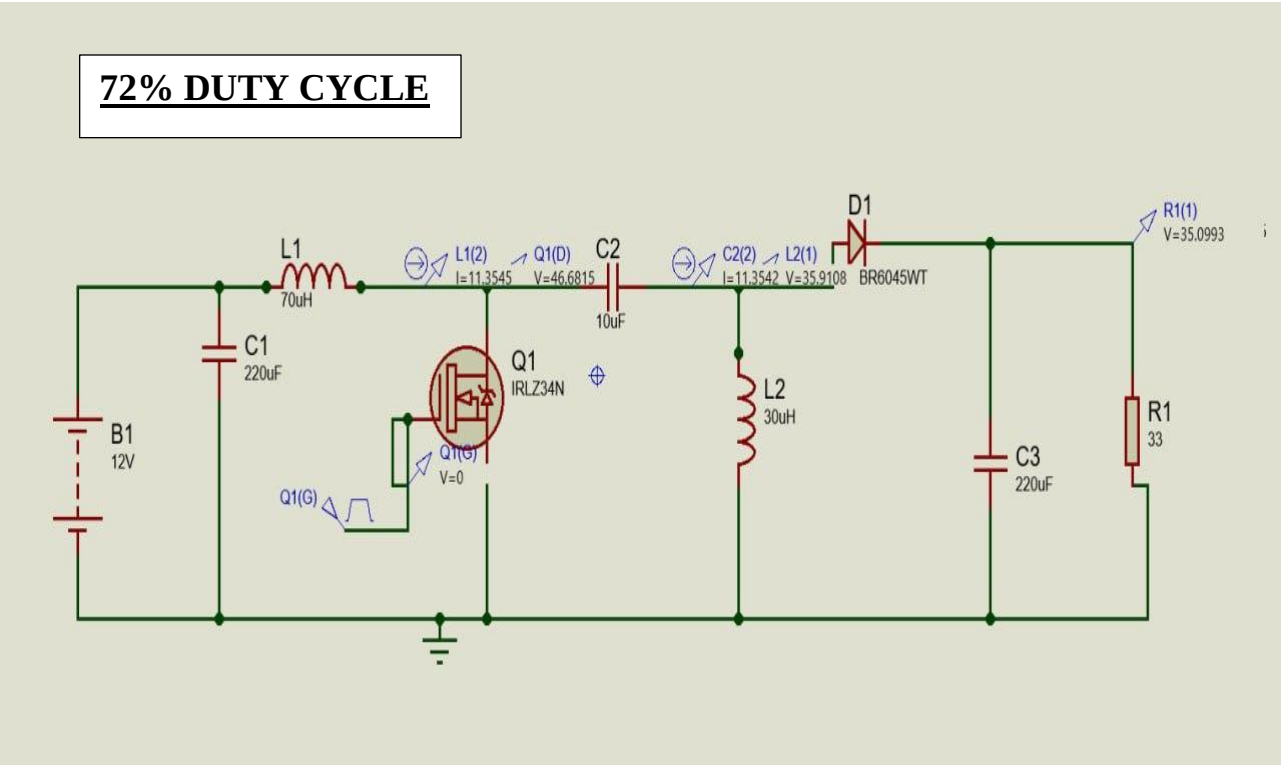

Present Hardware Setup:

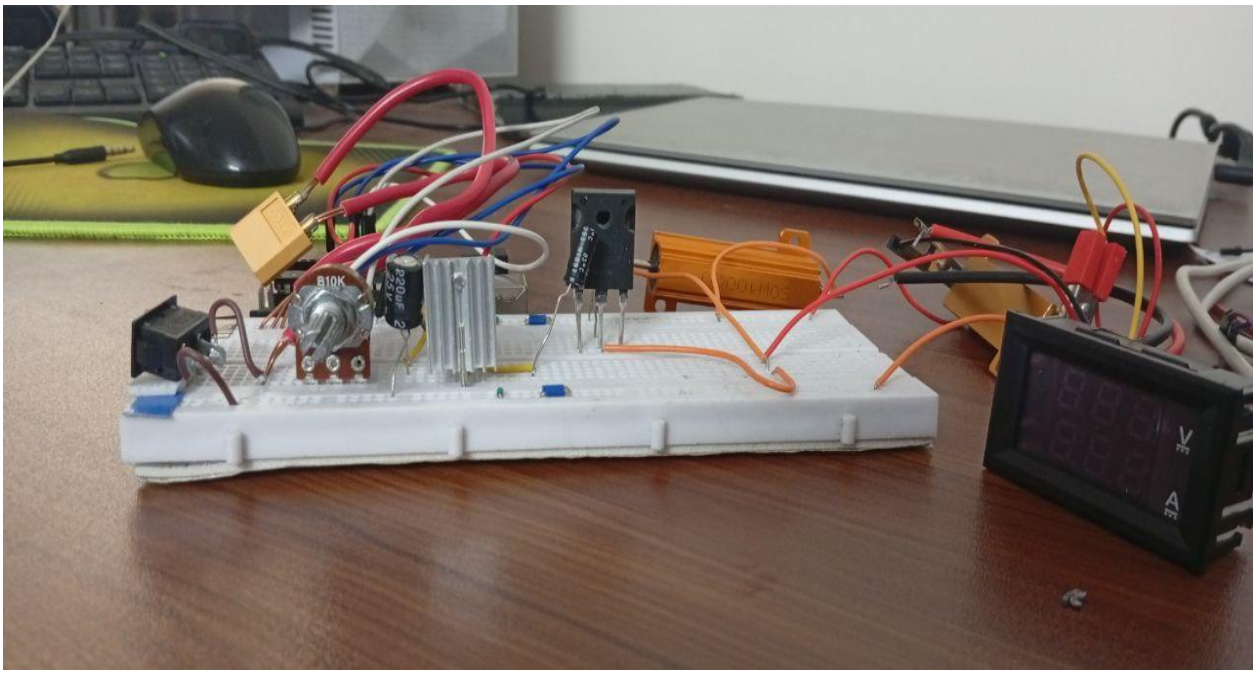

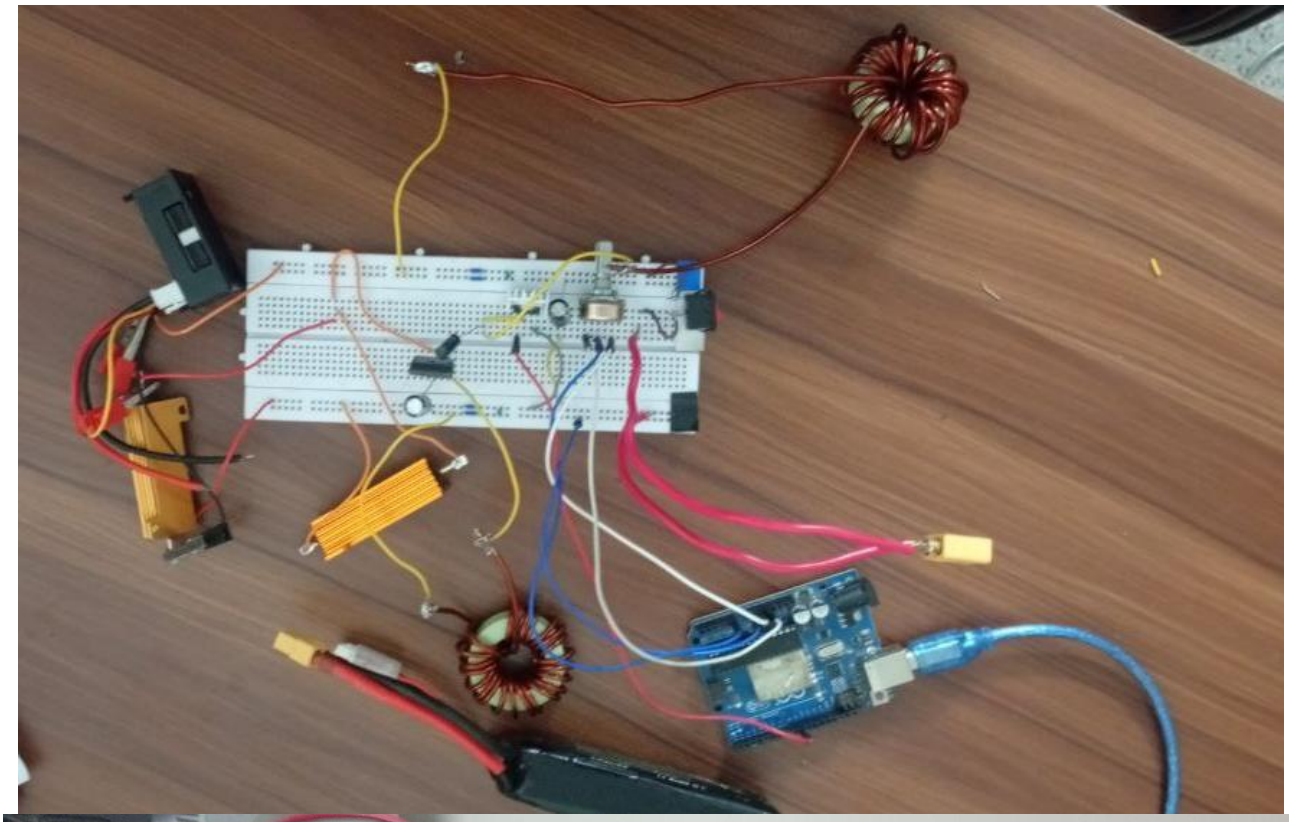

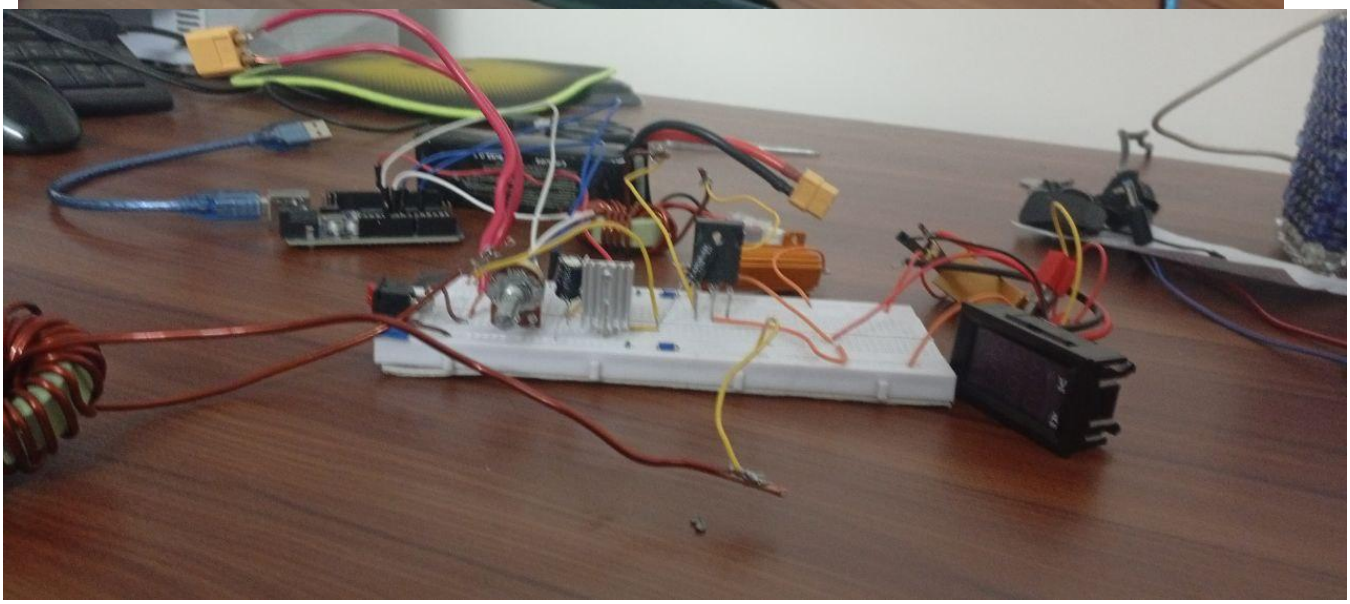

70uH inductor

30uH inductor

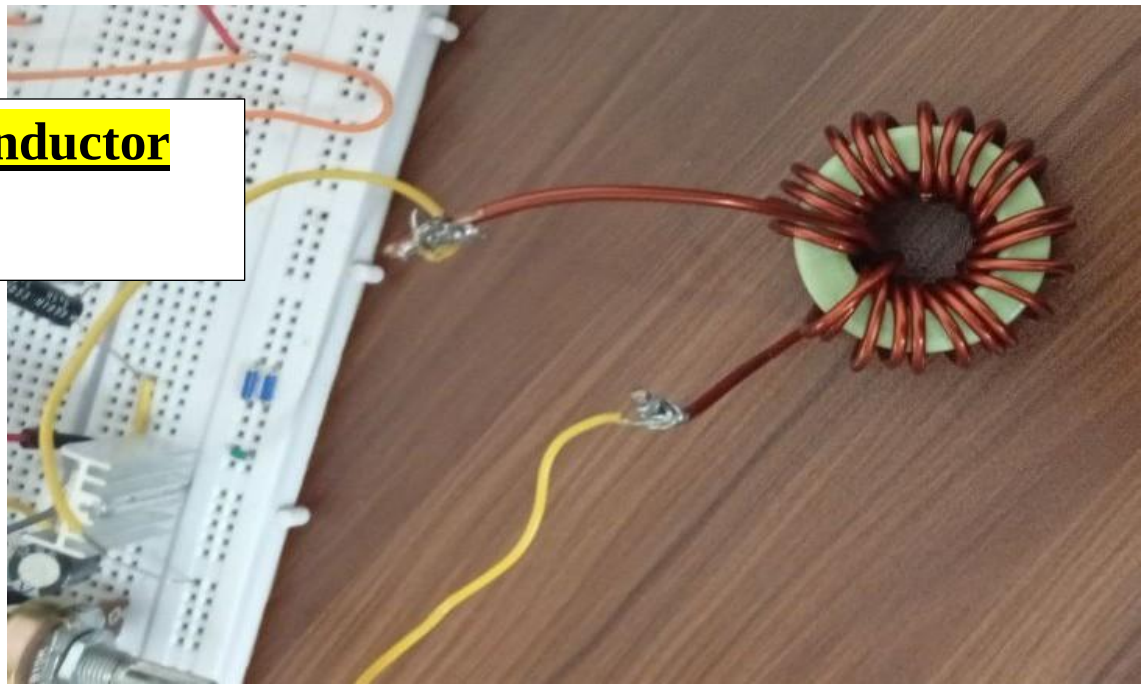

https://youtu.be/NnsDpXUPZfk

FROM HARDWERE :

DUTY CYCLE AND VOLTAGE

0	0
0.63	0.4
1.26	0.6
1.89	0.75
2.52	0.9
3.14	1.1
3.77	1.2
4.4	1.45
5.03	1.6
5.66	1.7
6.29	1.9
6.92	2
8.18	2.3
9.43	2.5
10.06	2.7
11.95	3.1
13.21	3.4
15.72	3.9
17.61	4.4
20.75	5
23.27	5.4
26.42	6
28.93	6.5
33.33	7.4
35.22	7.8
37.11	8
40.88	8.8
44	9.8
47.8	10.1
50.94	10.6
54.09	11.9
57.23	13.4
61.01	15.4
65.41	18.3
69.18	21.6
71.7	23.5

Ln 30, Col 12 390 charact Plain t 100% W

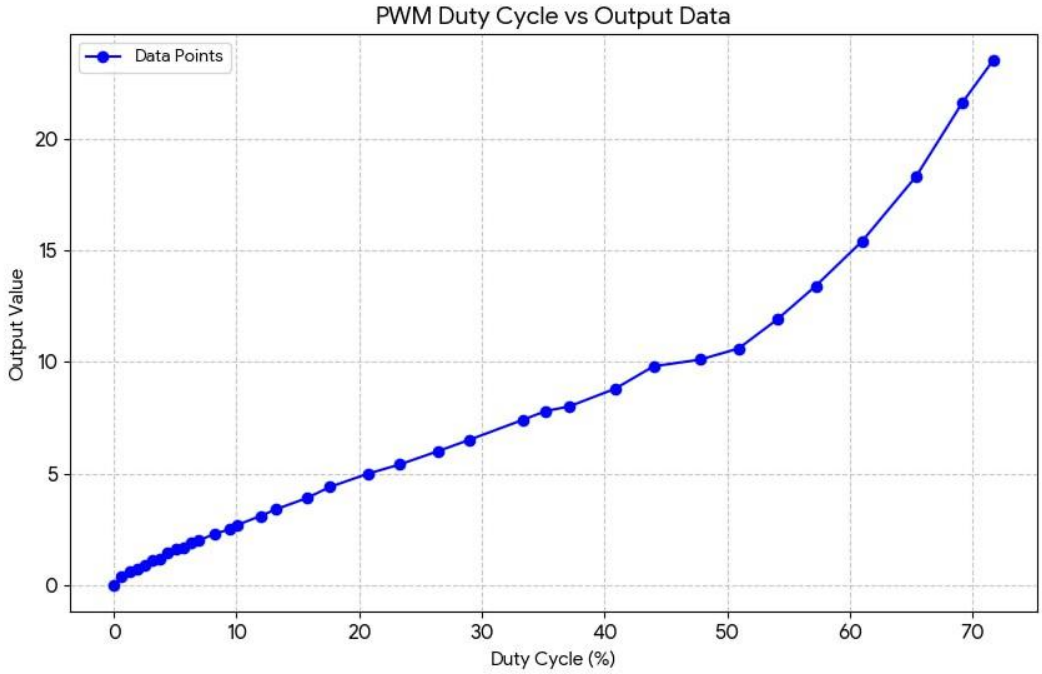

Applications:

1. Conveyor Belt Systems
2. CNC Machine Tooling
3. Industrial Mixers/Agitators
4. Robotic Actuators
5. Peristaltic Pumps

https://youtu.be/NnsDpXUPZfk